THIS DRAWING IS UNPUBLISHED. RELEASED FOR PUBLICATION 19
© COPYRIGHT 20 - ALL RIGHTS RESERVED.

LOC	DIST
AD	00

REVISIONS

P	LTR	DESCRIPTION	DATE	DWN	APVD
	A	REVISED PER ECO-11-013132	13JUL2011	HMR	MH

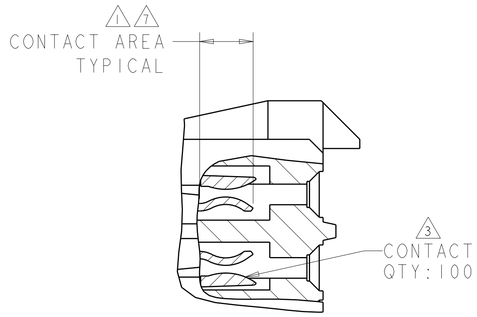

DETAIL M
SCALE 12:1

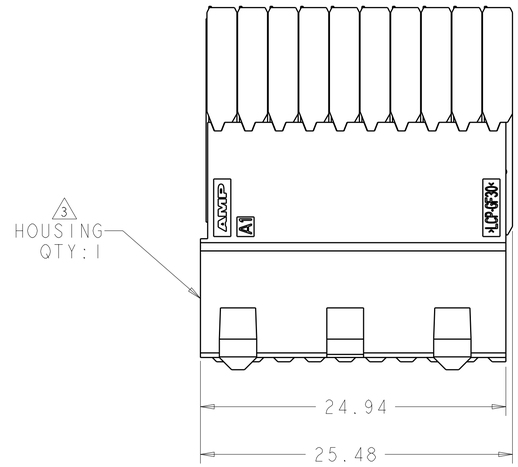

1. CONTACT MATING AREA MEETS THE PERFORMANCE REQUIREMENTS OF TE CONNECTIVITY PRODUCT SPECIFICATION 108-1957; BASED ON TELCORDIA GR-1217-CORE, APPLICATIONS IN UNCONTROLLED ENVIRONMENTS.
2. 0.76µm MIN TIN OVER 1.27µm MIN NICKEL
3. MATERIAL: CONTACT - COPPER ALLOY
   SHIELD - PHOSPHOR BRONZE
   HOUSING - LCP, UL94V-0
   CHICKLET - GLASS FILLED POLYESTER
4. REFERENCE APPLICATION SPEC 114-13020 FOR RECOMMENDED PLATED THRU HOLE DIAMETER AND PLATING THICKNESS.
5. DATUM AND BASIC DIMENSION ESTABLISHED BY CUSTOMER.
6. SEATING HEIGHT TO BOARD SURFACE.
7. CONTACT AREA LUBRICATED WITH BELLCORE APROVED LUBRICANT. TECHNICAL REFERENCE: GR-1217-CORE, ISSUE 1, NOVEMBER 1995.
8. DATE CODE
9. PART NUMBER

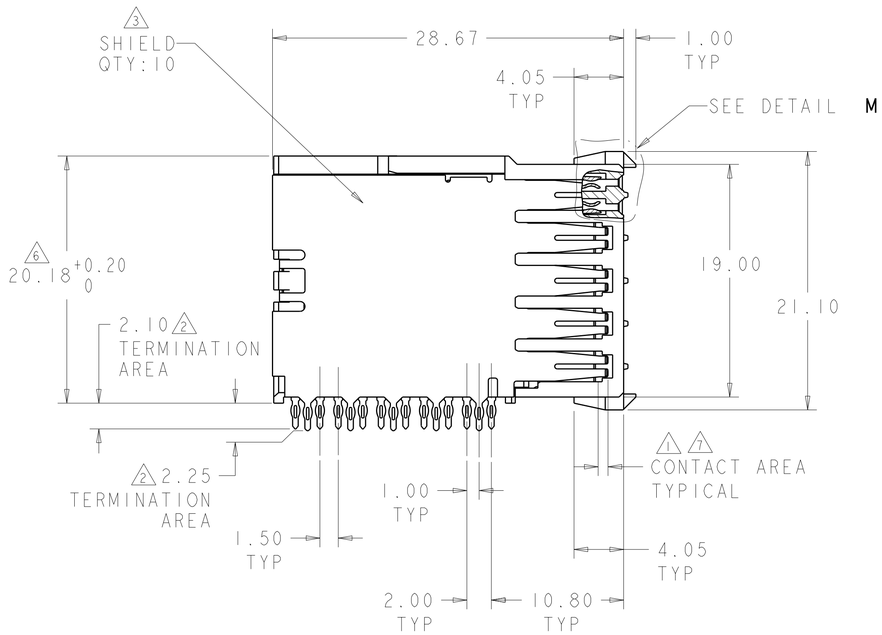

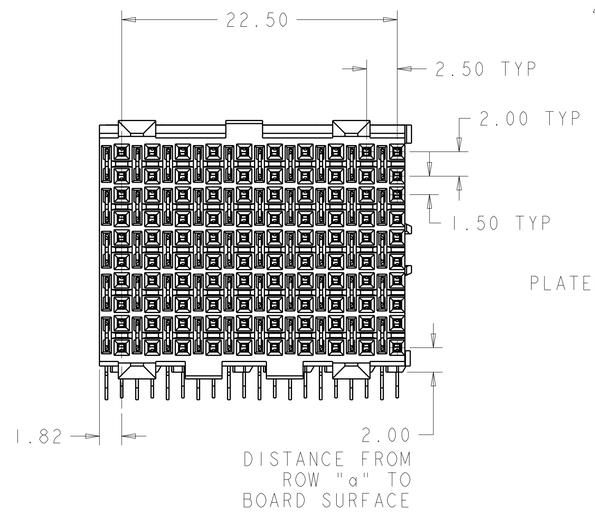

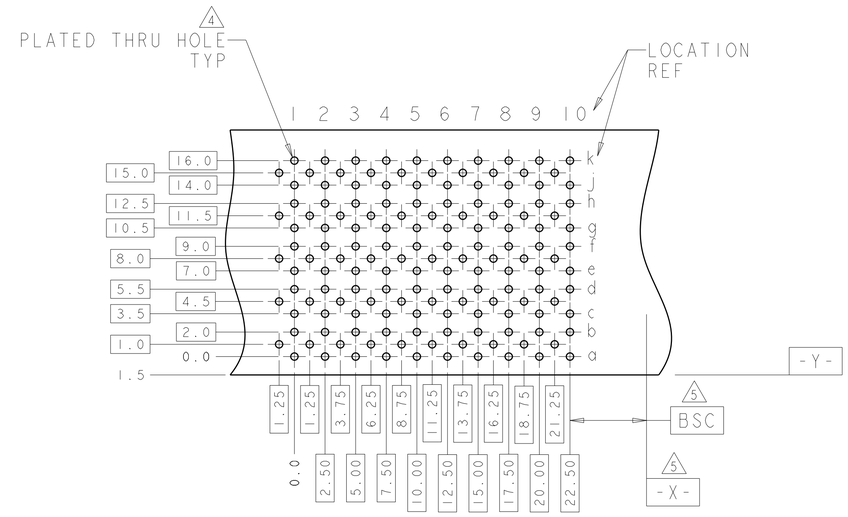

RECOMMENDED PRINTED
CIRCUIT BOARD LAYOUT
COMPONENT SIDE OF PRINTED CIRCUIT BOARD

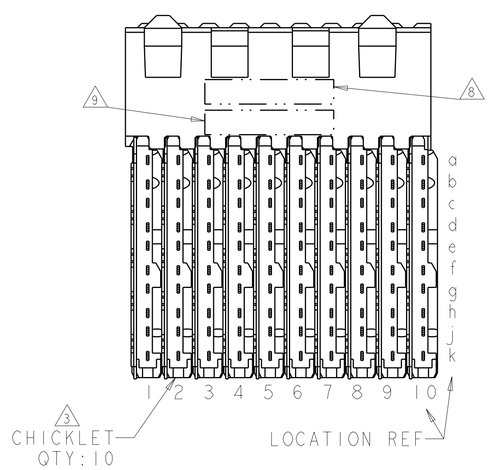

5120790-1

PART NUMBER

THIS DRAWING IS A CONTROLLED DOCUMENT.	DWN B.CARBO 08DEC04	TE Connectivity	
DIMENSIONS: mm	CHK R.PATTERSON 08DEC04	NAME RECEPTACLE ASSEMBLY, 100 POSITION 10 ROW, DUAL BEAM, Z-PACK HS3	
TOLERANCES UNLESS OTHERWISE SPECIFIED: 0 PLC ±- 1 PLC ±0.2 2 PLC ±0.13 3 PLC ±0.05 4 PLC ±- ANGLES ±1	APVD R.PATTERSON 08DEC04		
	PRODUCT SPEC 108-1957		
	APPLICATION SPEC 114-13020	SIZE A1 / CAGE CODE 00779 / DRAWING NO C-5120790	RESTRICTED TO -
MATERIAL - 3	FINISH SOLDER TAIL: 2 CONTACT: 1	WEIGHT -	
		CUSTOMER DRAWING	SCALE 4:1 / SHEET 1 OF 1 / REV A

4805 (3/11)

Pro/ENGINEER DRAWING